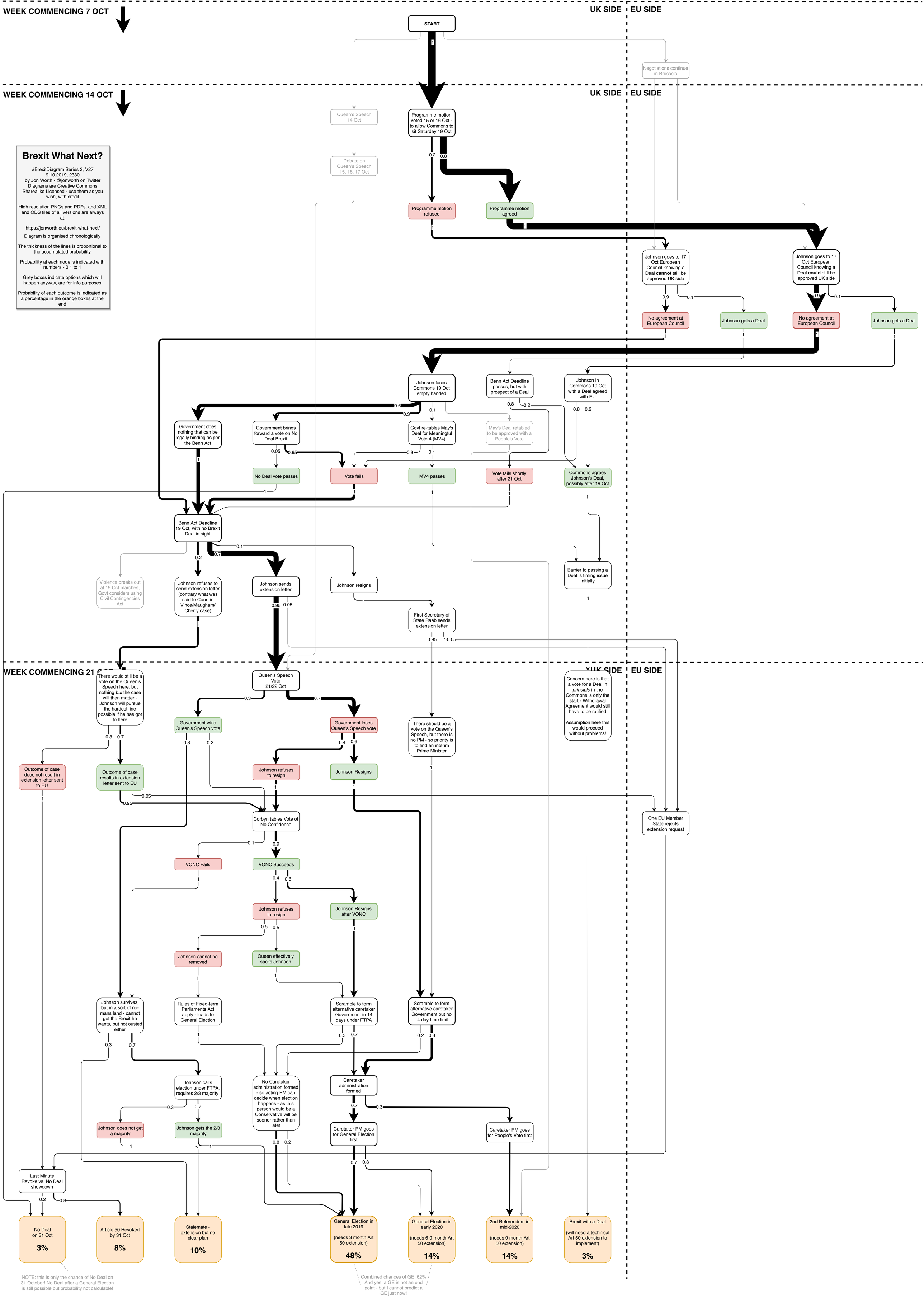

Brexit What Next?

#BrexitDiagram Series 3, V27
9.10.2019, 2330
by Jon Worth - @jonworth on Twitter
Diagrams are Creative Commons Sharealike Licensed - use them as you wish, with credit

High resolution PNGs and PDFs, and XML and ODS files of all versions are always at:

https://jonworth.eu/brexit-what-next/

Diagram is organised chronologically

The thickness of the lines is proportional to the accumulated probability

Probability at each node is indicated with numbers - 0.1 to 1

Grey boxes indicate options which will happen anyway, are for info purposes

Probability of each outcome is indicated as a percentage in the orange boxes at the end